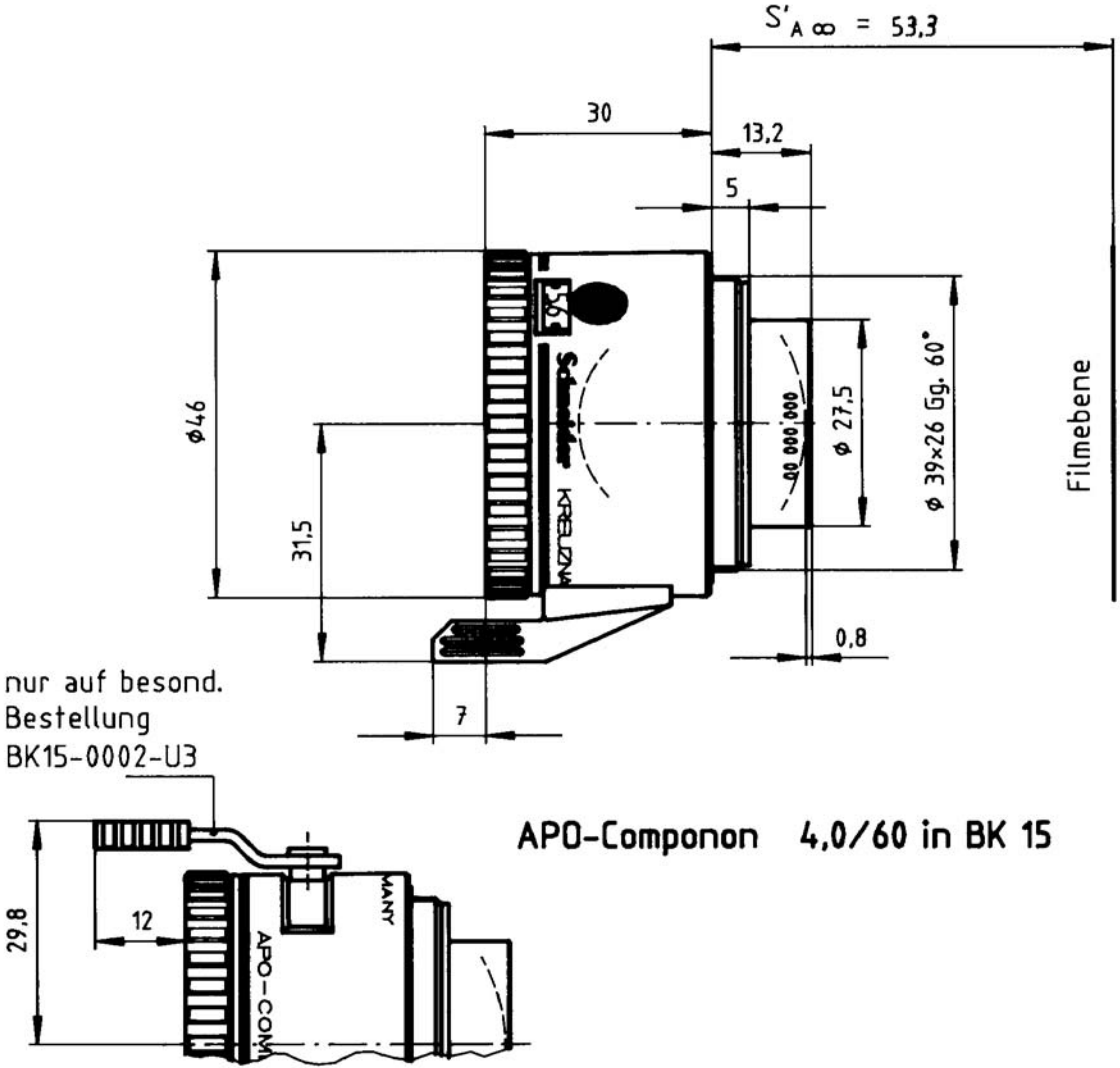

APO-Componon 4,0/60 in BK 15