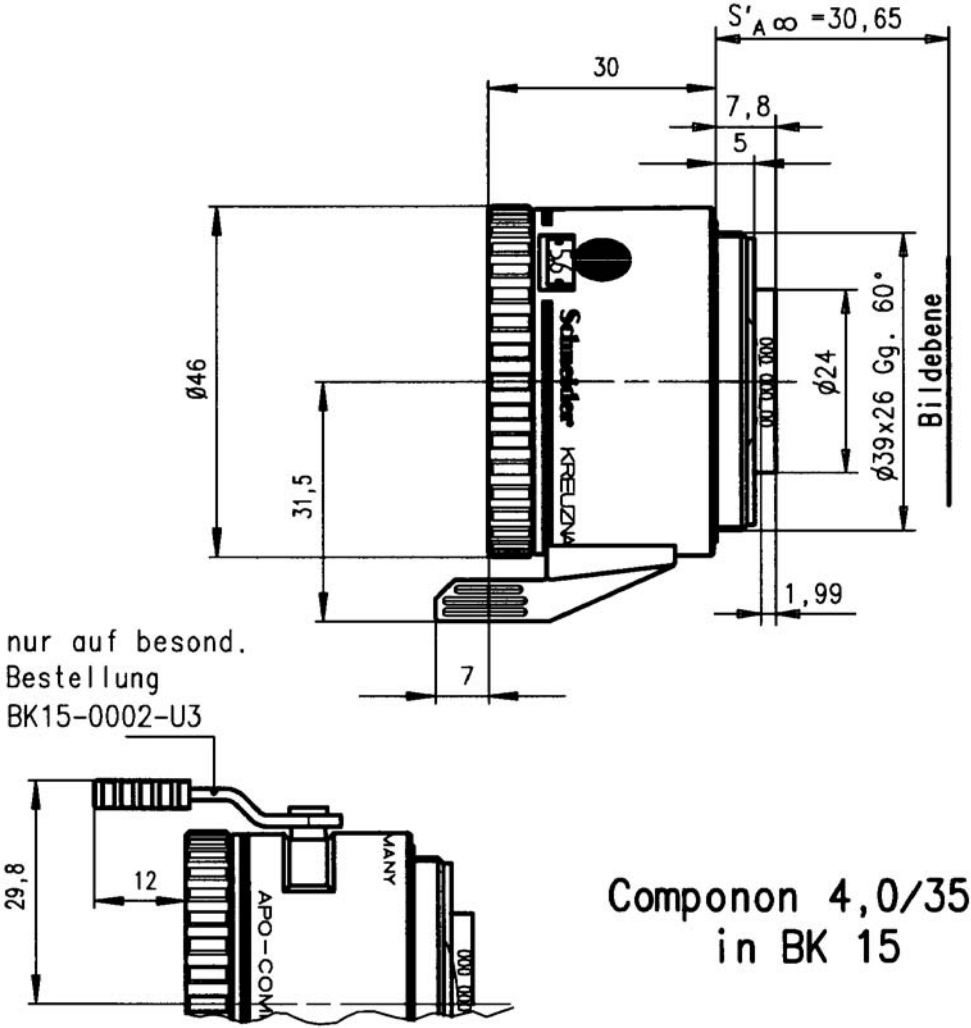

Componon 4,0/35
in BK 15